ANNEXURE-1B TO PY55295

STANDARD SPECIFICATION FOR NUMERICAL RELAYS

PROJECT	**75MW VISAKH REFINERY MODERNIZATION PROJECT (VRMP)**
CUSTOMER	**M/S HINDUSTAN PETROLEUM CORPORATION LIMITED,VIZAG,A.P**
CONSULTANT	**ENGINEERS INDIA LIMITED**

COPYRIGHT AND CONFIDENTIAL
The information on this document is the property of BHARAT HEAVY ELECTRICALS LIMITED.
It must not be used directly or indirectly in any way detrimental to the interest of the company.

COPYRIGHT AND CONFIDENTIAL
The information on this document is the property of BHARAT HEAVY ELECTRICALS LIMITED.
It must not be used directly or indirectly in any way detrimental to the interest of the company.

CONTENTS

1.0 Scope
2.0 Codes and standards
3.0 Site Conditions
4.0 General Requirements
5.0 Technical Requirements
5.1 Auxiliary Power Supply
5.2 Basic Requirement & Construction Details
5.3 Software Security
5.4 Display & Indication
5.5 Protection Functions
5.6 Metering Functions
5.7 Control Functions
5.8 Lock Out (86), Trip Circuit Supervision (95), Auxiliary Relays and Timer Functions
5.9 Disturbance/Event recording and Data storage
5.10 Input/output interface, Filters and Galvanic Isolation
5.11 Relay communication

COPYRIGHT AND CONFIDENTIAL
The information on this document is the property of BHARAT HEAVY ELECTRICALS LIMITED.
It must not be used directly or indirectly in any way detrimental to the interest of the company.

1.0 SCOPE

The intent of this specification is to define the minimum requirement of design, manufacture, testing, packing and dispatch of Numerical relays and Substation Automation System. The specification also defines the requirement of communication and integration for Substation Automation System.

2.0 CODES AND STANDARDS

2.1 The equipment shall comply with the requirements of latest revision of following IEC standards / equivalent Indian Standards, unless otherwise specified:

IEC 60068	: Environmental Testing
IEC 60073	: Basic safety principles for man machine interface, marking & identification — Coding principles for indicators and actuators
IS/IEC 60529	: Degree of protection provided by enclosure (IP Code)
IEC 60255	: Electrical relays
IEC 61000	: Electromagnetic compatibility (EMC)
IEC 61850	: Communication networks & systems in substations

2.2 In case of imported equipment, standards of the country of origin shall be applicable; if there, standards are equivalent or more stringent than the applicable IEC / Indian standards.

2.3 The equipment shall also conform to the provisions of CEA regulations and other statutory regulations currently in force in the country.

2.4 In case Indian standards are not available for any equipment, standards issued by IEC / BS / VDE / IEEE / NEMA or equivalent agency shall be applicable.

2.5 In case of any contradiction between various referred standard/ specification/ data sheet and statutory regulation, most stringent requirements shall prevail. However, Owner's decision in this regard will be final and binding.

3.0 SITE CONDITIONS

3.1 The relay shall be tropicalised, for satisfactory operation when installed in a panel located in a pressurized substation with restricted natural air ventilation, in tropical humid and corrosive atmosphere. Relay shall be designed to perform all its functions and operate under site conditions specified in the main specification PY55295.

4.0 GENERAL REQUIREMENTS

4.1 The equipment offered shall be brand new with state of the art technology with proven field track record of similar type and model or model in same series with additional features. No prototype equipment shall be offered.

4.2 Vendor shall ensure availability of spare parts and maintenance support services for the offered equipment at least for 15 years from the date of supply.

4.3 Vendor shall give a notice of at least one year to the end user of equipment and EIL before phasing out the product/spares to enable the end user for placement of order for spares and services.

4.4 In case of relays manufactured outside India, the relay manufacturer through his Indian establishment or associate in India shall provide application, testing, commissioning, after sales service and other necessary support for minimum of 15 years to customer. Their Indian establishment or associate company in India shall also maintain adequate inventory of each type of relay or spares to meet the requirement arising during project execution and plant operation. Relay manufacturer shall possess a signed Memorandum of Understanding with their Indian associate for providing customer support

5.0 TECHNICAL REQUIREMENTS

5.1 Auxiliary Power Supply

Unless otherwise specified, numerical relays, data concentrator, Ethernet switches, gateway & HMI shall be suitable to accept both AC/DC supplies with range 110V to 240V with tolerance of ± 15%. The auxiliary power supply shall preferably be site-selectable requiring no additional hardware.

COPYRIGHT AND CONFIDENTIAL
The information on this document is the property of BHARAT HEAVY ELECTRICALS LIMITED.
It must not be used directly or indirectly in any way detrimental to the interest of the company.

5.2 Basic Requirement and Construction Details

5.2.1 Relay shall be suitable for flush mounting. The relay enclosure front shall be dust tight having degree of protection minimum as IP5X.

5.2.2 Relay terminals shall be suitable for termination of 1.5/2.5/4 sq mm wires, for all hardwired connections.

5.2.3 Relay shall be modular with plug in type PCB for easy replacement. The relay terminals shall be easily accessible for testing and commissioning.

5.2.4 Current operated relay shall have provision for minimum 3 number phase CT inputs & 1 no. earth fault. Voltage operated relay shall have provision of minimum 3 numbers 1-phase PT inputs. The exact number of CT and PT inputs shall be based on the schematic requirements, relays shall be selected accordingly. Incase of comprehensive single numerical relay, the relay shall have provision for both current and voltage inputs.

5.2.5 CT shorting link shall be provided at terminal block as required.

5.2.6 All numerical relays shall have key pad/ keys to allow relay setting from relay front. All hand-reset relays shall also have reset button on relay front. Self-reset or hand reset feature of the relay shall be software selectable and password protected.

5.2.7 Relay shall be suitable for 1 A or 5A CT secondary. CT secondary 1A or 5A shall either be software selectable or by providing suitable link. Selection between IA or 5A should be possible at site.

5.2.8 Relays shall have self-diagnostic feature with indication of relay failure on relay front. Relay faults (Self- diagnostic) shall be communicated and annunciated to substation automation system.

5.2.9 Relays shall have functions as per single line diagram in Annexure-03, numerical relay data sheet and as mentioned specifications PY55295 & annexures.

5.2.10 All relay shall be communicable type with dual redundant ports communicable on IEC61850HSR protocol.

5.2.11 All relays shall have inbuilt disturbance recording function with high resolution

5.3 Software Security

The relays shall be provided with suitable security (password protection) against unauthorized WRITE ACCESS for change in relay setting. However, it should be possible to view metering, protection settings, status and event data as READ ONLY without password protection.

5.4 Display and Indication

5.4.1 All relays shall have LCD display along with LED indications for display of settings, status, faults and events. Relays for generator protection, switchyard and GIS shall be provided with medium size LCD display having facility for graphical display of mimic with upto 15 objects on each page.

5.4.2 LCD display shall be backlit and temperature compensated up to 55°C for contrast and legibility.

5.4.3 Relays shall have 3 fixed LEDs for Relay ON/Control supply ON, fault trip & relay unhealthy apart from freely configured LEDs.

5.5 Protection Functions

5.5.1 Over Current/Earth Fault Protection

i) This section describes over current & earth fault protection function, which mainly include different setting stages such as low set, high set and high set instantaneous (51, 50, 51N,50N). Over current protection function provided should have IDMTL characteristic for low set and high set stages and definite time delay for high set instantaneous stage.

COPYRIGHT AND CONFIDENTIAL
The information on this document is the property of BHARAT HEAVY ELECTRICALS LIMITED.
It must not be used directly or indirectly in any way detrimental to the interest of the company.

ii) Over current relay shall be three-phase type with 4 elements; 3 elements for inverse and definite time delay over current and one element for inverse and definite time delay earth fault current. Selection of inverse or definite time feature shall be user selectable.

iii) The IDMTL characteristic (for 51 and 51N) shall be as per IEC. The inverse characteristics shall include normal inverse, very inverse, extremely inverse, long inverse and shall be soft ware selectable. Inverse element shall have two or more stages (low and high set) for selection of required inverse characteristic to achieve close protection as required. Definite time characteristic shall have minimum 2 stages with adjustable current and time setting. IDMT earth fault protection (51N) with setting range starting from 0.01% shall be provided.

iv) Relay shall also have separate current input from CBCT for measured earth fault current element. It shall be possible to connect earth fault element either through CBCT or to be connected residually. Minimum setting current for sensitive earth fault element shall be 1%.

v) Directional overcurrent & earth fault element shall be provided, wherever required.

vi) Voltage biased overcurrent / earth fault element shall be provided wherever required.

5.5.2 Motor Protection

i) Motor protection relay shall have all protection function such as over current, thermal (over load), locked rotor current, zero sequence, negative sequence, maximum number of start, motor overload pre-alarm, motor re-acceleration, lock out, inhibit of over current protection during motor starting through contactor feeders, hour run count, inhibit start after elapse of maximum number of starts etc.

ii) The relay shall be provided with 6 Nos. RTD and 2 Nos. BTD analog inputs, if specified in the data sheet / job specification. Alternatively, external RTD/BTD module having interface with numerical relay can be provided. The numerical relay with RTD / BTD inputs shall be suitable for shielded triad cable of conductor size 1.5sqmm copper, unless otherwise specified.

5.5.3 Transformer Protection

i) In addition to overcurrent & earth fault function, wherever required, the main numerical relay shall also include standby earth fault protection function (51G) for the transformer. The standby earth fault shall operate from a separate neutral CT input and shall have definite time / IDMTL characteristics as per IEC.

ii) Wherever the transformer requires restricted earth fault protection (64R), separate numerical relay shall be provided. For details of transformer differential protection relay refer Cl. 5.5.6.

iii) Transformer auxiliary protection (OTI/WTI/Buchholz/MOG etc) shall be included as a part of numerical relay.

iv) Transformer differential protection shall be provided, wherever specified.

5.5.4 Voltage Operated Protection Functions

i) These functions include under voltage (27), over voltage (59), ON delay and OFF delay timers, phase sequence voltage, neutral displacement and Synchro-check functions etc.

ii) The under voltage and overvoltage protective function shall have different stages with IDMTL and definite time characteristics.

iii) If specified in single line diagram, the relay shall have under and over frequency function along with frequency supervised Rate of change or average rate of change of frequency function.

COPYRIGHT AND CONFIDENTIAL
The information on this document is the property of BHARAT HEAVY ELECTRICALS LIMITED.
It must not be used directly or indirectly in any way detrimental to the interest of the company.

5.5.5 Differential Protection

Suitable differential protection shall be provided as required as per single line diagram in Annexure-03 of specification PY55295 for the specific application such as for transformer, feeder, bus section etc. The following requirements, as applicable, shall be complied:

i) Differential protection shall be either high impedance or low impedance type. In case of high impedance type, suitable non linear resistor shall be provided to limit the peak overvoltage.

ii) Transformer differential protection shall have suitable harmonic restraint feature to avoid mal tripping during switching.

iii) For transformer differential protection, necessary correction for ratio error and for transformer primary and secondary vector grouping shall be taken care in the relay itself without additional ICTs. The required relay setting for this shall be programmable.

iv) Bus differential relay shall have feature for CT supervision and check differential.

v) In case separate hard-wired relay is used for check differential, the status/ event of same shall be communicated through the numerical relay provided for main differential application.

vi) Unless otherwise specified, the differential relays such as transformer differential, feeder differential etc. shall be suitable for cable connection between CTs and relay using 2.5 sq.mm., Cu conductor, PVC insulated, armoured cable. However, for differential protections provided for feeders having long lengths, armoured FO cable may be considered. In cases where FO cable is not suitable, shielded twisted pair cable of conductor size 1.5sqmm copper shall be specifically mentioned by the bidder in the offer for EIL/Owner's acceptance on case to case basis.

vii) For outgoing plant feeders for owner's use, the sending end and receiving end relays for 87F protection shall be supplied by bidder. receiving end relays shall be loose supplied along with main package.

5.6 Metering Functions

The metering function shall be provided as required and same shall be built inside the numerical relays.

5.7 Control Functions

5.7.1 The control function shall be built inside the numerical relays. For this purpose relays shall have all graphical PLC/Boolean logic functions such that complete control logic of the feeder along with all necessary interlocks as required can be developed inside the relay.

5.7.2 Relays for motor feeder shall be equipped with all control functions and interlocks related to motor feeder. If reacceleration is a part of motor feeder, the control function shall also cover reacceleration logic.

5.7.3 Relays shall have sufficient integral I/Os to take care of complete feeder logic. External I/O module for implementation of logics is not acceptable.

5.8 Lock Out (86), Trip Circuit Supervision (95), Auxiliary Relays and Timer Functions

5.8.1 Unless otherwise specified the numerical relays shall have built in lock out function. For motor feeders additional built-in lockout element shall be provided to receive process trip signals. Lock out elements shall be self reset or hand reset and shall be software selectable.

5.8.2 The numerical relays shall have built in trip circuit supervision function, unless otherwise specified.

5.8.3 Auxiliary relays/ Timers function etc as required for control schematics shall be programmable as a part of numerical relay. The number of such elements as required for schematic shall be considered.

5.8.4 Timer function shall be programmable for both ON/OFF delays.

COPYRIGHT AND CONFIDENTIAL
The information on this document is the property of BHARAT HEAVY ELECTRICALS LIMITED.
It must not be used directly or indirectly in any way detrimental to the interest of the company.

5.9 Disturbance/ Event Recording and Data Storage

5.9.1 Breaker trip/ close status, relay faults, trip values, event data and disturbance record data shall be stored in the relay in non-erasable memory or memory backed up by lithium battery. Under no circumstances such as withdrawal of power to the relays shall the status, data and events in the memory get erased. Unless otherwise specified, it should be possible to store total 10 seconds of disturbance recording and 200 sequence of event records. Subsequent events shall be overwritten following principle of FIFO.

5.9.2 All disturbances/ events shall be time stamped within the relay.

5.10 Input/ Output Interface, Filters and Galvanic Isolation

5.10.1 Voltage (through PT) input to relay, shall be 110V +/- 10%, unless otherwise specified.

5.10.2 Output relays shall have 4 numbers spare NO contacts; each shall separately be programmable for either hand reset or self- reset.

5.10.3 All I/Os shall have galvanic isolation. Analog inputs shall be protected against switching surges, harmonics etc.

5.11 Relay Communication

5.11.1 All numerical relay shall have RS232/RJ45/USB port on the front for hooking laptop. The rear numerical relays shall have FO Ethernet (IEC 61850 HSR based) communication port for communication with data concentrator/ HMI/ Station bus.

5.11.2 Communication between relays and IEC61850 HSR Box/switches shall be provided as Redundant communication architecture as per attached architecture.

Each Numerical Relay shall be provided with dual port for ensuring full redundant communication and required number of redundant HSR Box/ Switches shall be provided in each switchboard as per total number of numerical relays.

Numerical relays shall communicate using IEC 61850-HSR protocol. For hooking up to Data Concentrator/ HMI/gateway for upper level connectivity, redundant communication link through two switches within the ring. Ethernet switch shall have dual DC power supply.

HSR Box/switches shall be suitable for satisfactory operation inside the switchboards taking account of switchboard temperature rise and the site conditions specified. 20% ports in each Ethernet switch shall be kept as spare.

5.11.3 Numerical Relays shall be of latest version, communicable type with non-volatile memory, comprehensive unit providing protection, metering and control.

5.11.4 Laptop shall be of the latest configuration and processor as available at the time of purchase subject to approval by BHEL.

5.11.5 The no. of Digital Inputs (DIs) / Digital Outputs (DOs) in the Numerical Relays shall be sufficient for implementing all necessary logics (see Annexure-2A) and providing signals indicated in I/O Lists (see Annexures-4 & 2B). In view of the possibility of change in breaker logics during detailed engineering, 20% extra DIs/DOs shall be considered in Numerical Relays over what is deemed sufficient to implement the supplied logic diagrams. No price/time implication on account of change in breaker logics or change in NR DIs/DOs during detailed engineering will be entertained. However, minimum 24 DIs and 12 DOs shall be provided for numerical relays envisaged in incomers and bus couplers and Minimum 12 DIs and 6 DOs shall be provided for numerical relays envisaged in outgoing feeders. Minimum 20% IOs shall be available for future use.

5.11.6 All cables and associated accessories required for implementing a functional HSR Box/Ethernet Switch with the prescribed architecture shall be provided by the Vendor.

All cabling required for the interconnection of Numerical Relays with the HSR box/ Ethernet Switches shall be done at the vendor works itself.

FIRST ANGLE PROJECTION

(ALL DIMENSIONS ARE IN mm)

ESP-001-11A

NUMERICAL RELAY ARCHITECTURE

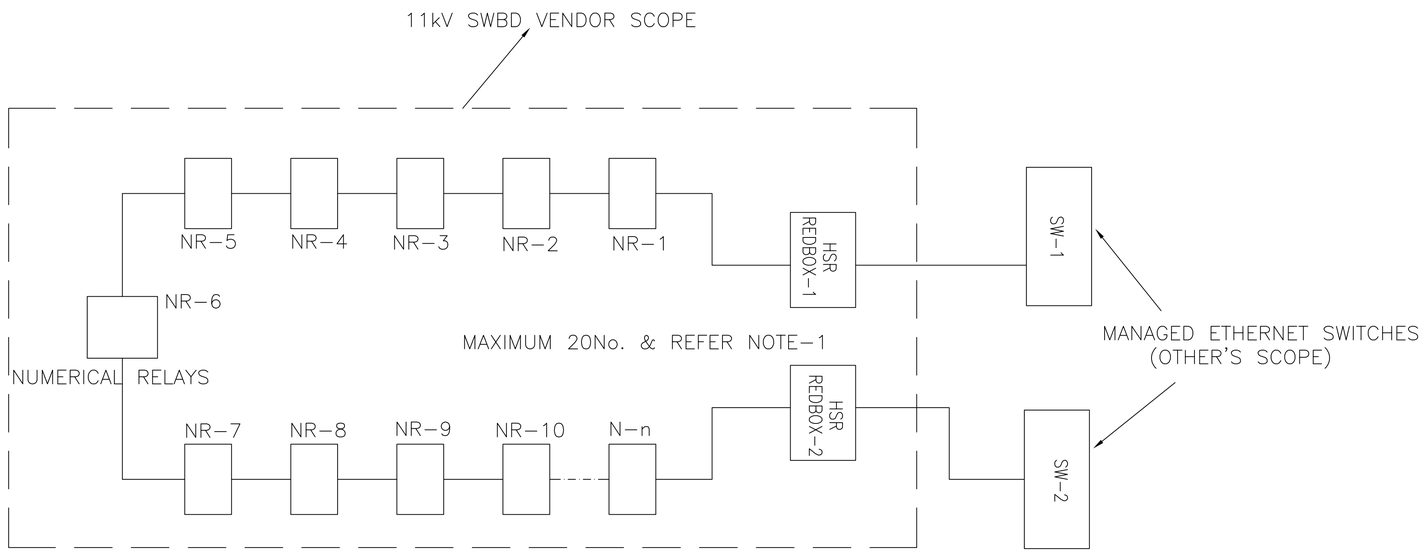

NUMERICAL RELAY ARCHITECTURE

NOTES: –

1. MORE THAN 20 DEVICES IN A HSR LOOP CAN BE ALLOWED WITHOUT EFFECTING NETWORK SPEED, RELIABILITY AND PERFORMANCE. THIS SHALL BE MUTUALLY DISCUSSED WITH CUSTOMER AND AGREED UPON WITHOUT ANY IMPLICATION. FURTHER, SAS SYSTEM SHALL BE ENGINEERED SUCH THAT ANY BOARD CAN BE TAKEN OUT FOR MAINTENANCE OR REMOVED WITHOUT AFFECTING COMMUNICATION WITH OTHER BOARDS.
2. EACH NUMERICAL RELAY SHALL HAVE SUFFICIENT HARDWIRED DI/DO TO ENGINEER SOFT CONTROL LOGIC AS A PART OF RELAY. HARDWIRED INTERLOCKS SHOULD BE MINIMIZED.
3. PROTOCOL SHALL BE IEC 61850HSR PROVIDING ALL FUNCTIONALITY SUCH AS PROTECTION, CONTROL, RELAY PARAMETERIZATION, TIME SYNCHRONIZATION, DOWN LOADING DISTURBANCE RECORD ETC.
4. DEVICES AS SHOWN SHOULD HAVE PROVISION FOR LAPTOP CONNECTIVITY.
5. LAPTOP ALONG WITH PROGRAMMING AND APPLICATION SOFTWARE SHALL BE SUPPLIED AS REQUIRED WITH LICENSE.
6. RELAYS & SWITCHES SHOULD HAVE TIME SYNCHRONIZATION WITH RESOLUTION OF +/- 0.1 MSEC.
7. THE SUPPLIED ARCHITECTURE SHOULD, IN ADDITION TO THIS ARCHITECTURE, MEET THE REQUIREMENT OF NUMERICAL RELAY DATA SHEET, DATA CONCENTRATOR DATA SHEET AND NUMERICAL RELAY SPECIFICATION ATTACHED WITH THE BID DOCUMENT.
8. THE NETWORK CABLES WHICH ARE GOING OUT OF SWGR/HSR BOX /SW SHALL BE FO CABLE. NETWORK CABLES WITHIN THE SWGR LOOPING CAN BE FO/CAT6.

PROJECT: CAPTIVE POWER PLANT (CPP) PACKAGE
VISAKH REFINERY MODERNIZATION PROJECT (VRMP)
JOB NO. B016

OWNER: HINDUSTAN PETROLEUM CORPORATION LIMITED

PMC: ENGINEERS INDIA LIMITED (EIL), NEW DELHI

BHARAT HEAVY ELECTRICALS LTD. HYDERABAD

	NAME	SIGN.	DATE	NO.OF VAR.
DRN.	GRM/AVS		12.05.18	
CHD.	P.SURESH		12.05.18	
APPD.	J.K.PATTANAIK		12.05.18	

DEPT.	UNTOL. DIMS.	SCALE	WEIGHT (KG)	REF. TO ASSY. DRG.	ITEM NO.	NO.OF ITEMS
PE&SD CODE. 450	GR. ~~C/M/F~~			–N.A.–	–N.A.–	–N.A.–

TITLE: ARCHITECTURE

CARD CODE: N.A.

BHEL DRG NO. PY–FB–1–M104–8801–02

CUST DRG NO.

SHT. No

NO. OF SHT.

REV. 00

ALTERED	REV.	DATE	ALTERED	REV.	DATE	ALTERED	REV.	DATE	ALTERED	REV.	DATE	ALTERED	REV.	DATE	ALTERED	REV.	DATE	ALTERED	REV.	DATE	ALTERED	REV.	DATE	ALTERED
CHD/APPD			CHD/APPD			CHD/APPD			CHD/APPD			CHD/APPD			CHD/APPD			CHD/APPD			CHD/APPD			CHD/APPD
	ZONE			ZONE			ZONE			ZONE			ZONE			ZONE			ZONE			ZONE		

THE INFORMATION ON THIS DOCUMENT IS THE PROPERTY OF BHARAT HEAVY ELECTRICALS LIMITED. IT MUST NOT BE USED DIRECTLY OR INDIRECTLY IN ANY WAY DETRIMENTAL TO THE INTEREST OF THE COMPANY

GENERAL DIMENSIONAL LIMITS,FITS & TOLERANCES AS PER HY023026

INVENTORY NO | SIGN. AND DATE | REF. DRG. NO. | COMPUTER FILE NAME

DRG. NO. | SH. OF

ESP-001-11A

Project Project Management Consultancy (PMC) Services for execution of VRMP **Client** HPCL

Unit CAPTIVE POWER PLANT (CPP) **Location** VIZAG **Job No.** B016 **Unit No.** 606

PURCHASER'S DATA

A.	Site Conditions		
1.	Maximum Ambient Temperature	°C	45
2.	Minimum Ambient Temperature	°C	12.5
3.	Design Ambient Temperature	°C	45
4.	Relative Humidity	%	95
5.	Altitude Above MSL	m	< 5.56
6.	Environment		Humid & highly corrosive
B.	RELAY SELECTION		
1.	RELAY FUNCTION		
a	Only Protection		☐
b	Protection and metering		☐
c	Protection and metering and control		☑
d	Ethernet communication		☑
e	Password protection		
	a. For write		☐
	b. For both read and write		☑
2	CONTRUCTION FEATURE		
a	Enclosure type		IP5X
b	Terminal size-sqmm for external wires		2.5 for control, 4 for CT/PT
c	Mounting		flush
d	Drawout feature		as per 6-51-0055
e	Display type		Alpha Numeric LCD + LED indication
3	SPECIAL REQUIREMENT IF ANY		
a	Applicable standards		IEC
b	Distance for cable capacitance for application where field		
	contacts are directly wired to relay e.g. Motor start/ stop, intertrip	m	1000
4	INPUT POWER SUPPLY		
a	Site selectable feature		☑
b	Input supply	V	110 DC
5	CT/ PT INPUT TO RELAY		
a	Current operated relays		☐
	a1 Main CT input		
	a2 CT for sensitive EF or back up EF		
b	Voltage operated relays		☐
	b1 PT input		
c	Comprehensive relay		☑
	c1 Main CT input		3 CTs, 4 wire
	c2 PT input		3 Phase, 4 Wire
	c3 CT for sensitive EF or back up EF		1 CT, 2 wire input (Yes for I/C & TR fdr)
d	CT Secondary current		1
C	RELAY PROTECTION/ METERING FUNCTIONS		
1	CURRENT OPERATED RELAYS		
a	3 phase O/C element (50, 51)		* I> ☑ * I>> ☑ * I>>> ☑
	Characteristics as per IEC		
	* Inverse (normal, very, extremely, long) and definite time for I > and I >>		

Rev. No.	Date	Purpose	Prepared By	Reviewed By	Approved By
A	18-MAY-2017	ISSUED WITH TENDER	GAURAV KATYAL	ACHUTUNI SAI	GUPTA PARAG

Generated through Electrical Datasheet system (Copyrights EIL - All rights reserved)

Project	Project Management Consultancy (PMC) Services for execution of VRMP	Client	HPCL
Unit	CAPTIVE POWER PLANT (CPP)	Location	VIZAG
Job No.	B016	Unit No.	606

	* Definite time for I >>>	
b	E/F relay (50N, 51N, 51G)	* I> ☑ * I>> ☑ * I>>> ☑
	Characteristics as per IEC	
	* Inverse (normal, very, extremely, long) and definite time for IO >, IO >>	
	* Definite time for IO>>>	
c	Metering/ event recording	
	3 phase/ line currents	☑
	Disturbance record	☑
	Breaker trip/ close status	☑
	Relay faults	☑
	Trip Values	☑
2	**VOLTAGE OPERATED RELAYS**	
a	3 phase O/V element with time delay (59+2)	* OV> ☑ * OV>> ☑
b	3 phase U/V element with time delay (27+2)	* UV> ☑ * UV>> ☑
	Characteristics as per IEC	
	* Inverse (normal, very, extremely, long) and definite time for UV> ,UV>>	
c	Under/ Over Frequency element with time delay (81U/ 81O)	
	Settable under voltage restraint	☐
	df/dt element	☐
	Number of stages with u/f	
	Number of stages with df/dt	
d	Synchrocheck function	☑
e	Metering/ event recording	
	3 phase/ line Voltages	☑
	Disturbance record	☑
	Breaker trip/ close status	☑
	Relay faults	☑
	Trip Values	☑
3	**MOTOR PROTECTION RELAY**	
a	Protection elements	
	Thermal overload (49)	☑
	OC protection with doubling feature (50)	☑
	EF protection (50N)	☑
	Locked Rotor protection	☑
	Maximum start time	☑
	Maximum number of starts	☑
	Negative phase sequence	☑
	Under voltage delayed trip	☑
	EF Through CBCT	☐
	Single phasing	☑
b	Metering/ events	
	3 phase/ line current	☑
	Hour run	☑
	KW, KWH, pf	☑
	Disturbance record	☑
	Plot start characteristic	☑

Rev. No.	Date	Purpose	Prepared By	Reviewed By	Approved By
A	18-MAY-2017	ISSUED WITH TENDER	GAURAV KATYAL	ACHUTUNI SAI	GUPTA PARAG

Generated through Electrical Datasheet system (Copyrights EIL - All rights reserved)

Project	Project Management Consultancy (PMC) Services for execution of VRMP		Client	HPCL	
Unit	CAPTIVE POWER PLANT (CPP)	Location VIZAG	Job No.	B016	Unit No. 606

	Trip values	☑
	Start time	☑
	Start current	☑
c	Control	
	Breaker close in test mode	☑
	Reacceleartion logic	☑
	Breaker trip	☑
	RTD/BTD input	☑
4	**COMPREHENSIVE NUMERICAL RELAY**	
a	Current op elements (51, 50, 51N, 50N, 51G)	
b	Voltage op elements (59, 27, 2, 81U, 81O)	
c	Control function	
	Breaker close/ trip from relay	
	Breaker close/ trip on serial	
	PLC logic function for control scheme	
	Digital I/P & Digital O/P:	
	Motor Feeder control function	
5	**SPECIAL PROTECTION RELAYS (Refer Job Spec)**	
	Part of main relay	☐
	Separate relay	☑
a	Differential relays	☑
	BUS	Applicable
	Feeder	Required
	Trafo	as per Engineering Desgn Basis
	Machine	as per Engineering Design Basis
b	Directional relays (67, 67N)	☑
c	Restricted EF (64R)	☑
d	Generator protection	☑
e	Distance protection	☑
f	Reverse power relay	☑
6	**OTHER RELAY FEATURES**	
a	Analog inputs 4-20mA	
	RTD/ BTD-GPR	Required
	WTI/ OTI-Trafo relay	Required
	WTI= Winding temperature indicator	
	OTI= Oil temperature indicator	
b	Out put relays	
	Number of relays	As per 6-51-055
	Contact rating	
	Reset	
	FUNCTIONS part of numerical relay	
c	Lock out function (86)	☑
d	Trip circuit supervision(95)	☑
e	Watch dog	☑
f.	Time stamp	☑
g	Modular construction for easy and quick replacement of faulty PCB/circuit	☑
D	**ETHERNET COMMUNICATION AND RELAY INTEGRATION**	

Rev. No.	Date	Purpose	Prepared By	Reviewed By	Approved By
A	18-MAY-2017	ISSUED WITH TENDER	GAURAV KATYAL	ACHUTUNI SAI	GUPTA PARAG

Generated through Electrical Datasheet system (Copyrights EIL - All rights reserved)

Project	Project Management Consultancy (PMC) Services for execution of VRMP		Client	HPCL	
Unit	CAPTIVE POWER PLANT (CPP)	Location VIZAG	Job No.	B016	Unit No. 606

1	**RELAY INTEGRATION**	
a	Communication ports at Relay	
	Relay front	RS 232/ RJ45/USB
	Relay back	RJ45/FO
b	Protocol of relay LAN	~~IEC 61850~~ IEC-61850-HSR
c	Requirment of Integration	
	Integraton with DC	☑
	Directly to MMI	☐
d	Topology	~~as per 6-51-0055~~ IEC-61850-HSR
e	Data concentrators	YES
2	**REDUNDANCY**	
a	Relay LAN / serial	☑
	Redundant (serial)	☑
	Non redundant (star)	☑
b.	From DC to MMI	☑
	Redundant	☑
	Non redundant	☐
c	From DC to ECS-RTU	☑
	Redundant	☑
	Non redundant	☐
3	**REDUNDANCY REQUIREMENT FOR DC/ETHERNET SWITCH/MMI**	
a	Ports at STAR coupler	
	For each relay	Applicable
	For DC/Ethernet Switch	Applicable
b	Data concentrator / Ethernet Switch	
	Power supply card	Applicable
	Communication port for each relay LAN	Applicable
	Communication Processor	Dual redundant
4	**SERIAL COMMUNICATION FROM DC/ETHERNWT SWITCH ONWARDS**	
a	DC/Ethernet Switch to MMI	
	Topology	as per 6-51-0055
	Protocol	IEC 61850
b	DC to DCS	YES
c	DC/Ethernet Switch to ECS-RTU	YES
d	Scan time	as per 6-51-0055
5	**OTHER REQUIREMENT**	
a	Time synchronization	☑
b	Remote relay parameterization	☑
c	Annunciation at MMI	☑

MANUFACTURER'S DATA

1. NUMERICAL RELAY TYPES

	Relay Make/Model	Serial Ports	Analouge Inputs	No of DI/DO	Protocal	Any Other Data	Remarks
A	Incomer						
B	Buscoupler						

Rev. No.	Date	Purpose	Prepared By	Reviewed By	Approved By
A	18-MAY-2017	ISSUED WITH TENDER	GAURAV KATYAL	ACHUTUNI SAI	GUPTA PARAG

Generated through Electrical Datasheet system (Copyrights EIL - All rights reserved)

Project	Project Management Consultancy (PMC) Services for execution of VRMP			Client	HPCL
Unit	CAPTIVE POWER PLANT (CPP)	Location	VIZAG	Job No.	B016
Unit No.	606				

C	Generator						
D	Transformer						

2	DATA CONCENTRATOR / ETHERNET SWITCH AND RELAY INTEGRATION	
a	Model no.	
	Make	
b	Input power supply	
	Voltage	
	Power reqt	
c	Redundancy	
	Power supply	
	Communication processor	
	Communication port	
	Relay LAN/ Serial communication	
	ECS-RTU interface	
	MMI interface	
d	Serial interface/ Relay LAN	
	Topology	
	Protocol	
	Nos of relay in each	
	Topology	
	Type of port	
	Cable type	
e	Serial interface- MMI	
	Topology	
	Protocol	
	Type of Port	
	Cable type	
f	Serial Interface -ECS-RTU	
	Topology	
	Protocol	
	Type of Port	
	Cable type	
g	Number of Digital Input/ Aanalog Input (4-20mA)	
	DI for substation eqpt	
	Spare DI	
	AI as per project data sht	
	Spare AI	
h	Maximum Scan Time	
	Status	

Rev. No.	Date	Purpose	Prepared By	Reviewed By	Approved By
A	18-MAY-2017	ISSUED WITH TENDER	GAURAV KATYAL	ACHUTUNI SAI	GUPTA PARAG

Generated through Electrical Datasheet system (Copyrights EIL - All rights reserved)

Project	Project Management Consultancy (PMC) Services for execution of VRMP		Client	HPCL	
Unit	CAPTIVE POWER PLANT (CPP)	Location VIZAG	Job No. B016	Unit No. 606	

	events	
	Data acqusition (analog)	
	Disturbance record download time	
i	Other features	
	Spare capacity for additional devices for relay LAN	
	Time synchronization options	
	Power walk in time	
	Restoration time of communication of DC with NR & MMI	
3	**STANDARD FEATURES OF RELAY / SYSTEM ARCHITECTURE**	

Notes

Rev. No.	Date	Purpose	Prepared By	Reviewed By	Approved By
A	18-MAY-2017	ISSUED WITH TENDER	GAURAV KATYAL	ACHUTUNI SAI	GUPTA PARAG

Generated through Electrical Datasheet system (Copyrights EIL - All rights reserved)